AV DISPLAY (NORTH AMERICA) LTD.

AMG128128B

Unmarked tolerance ± 0.3

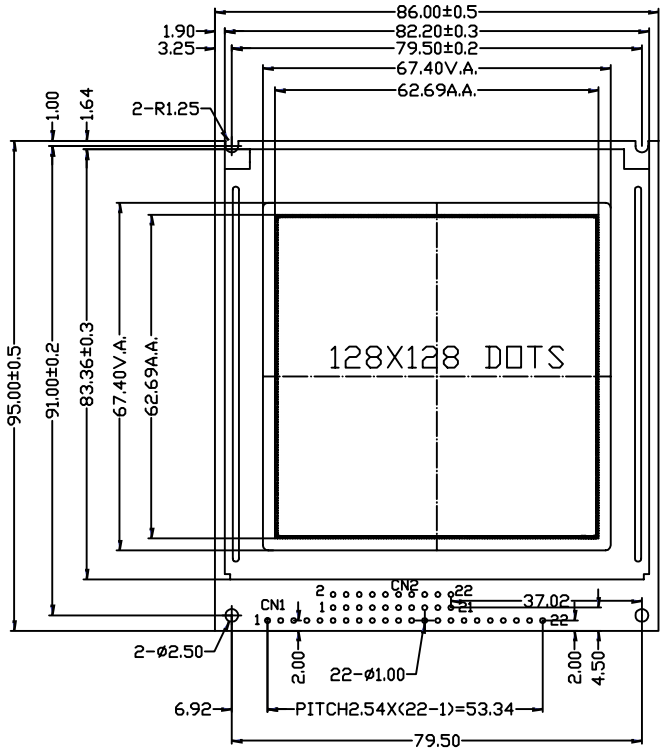

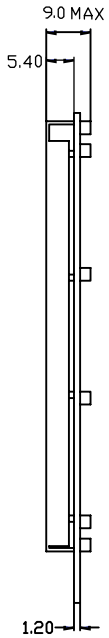

WITH LED B/L

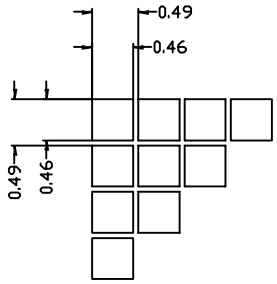

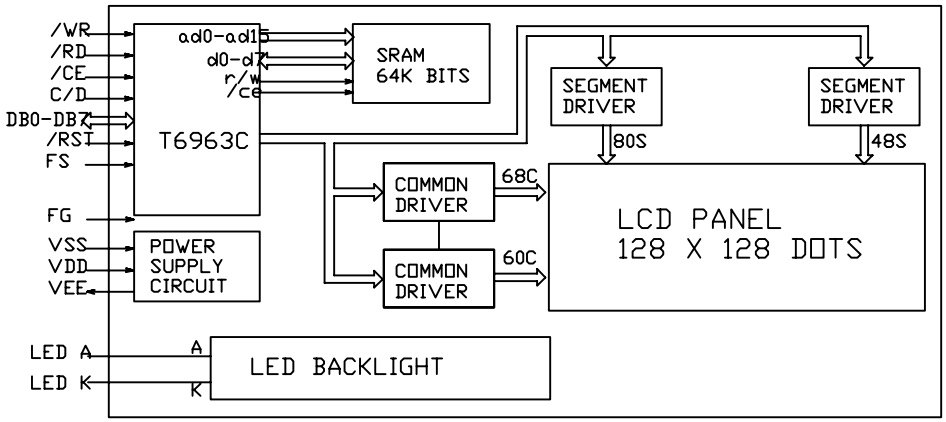

Pin No	Symbol	Pin No	Symbol
1	FG	12	DB1
2	VSS	13	DB2
3	VDD	14	DB3
4	V0	15	DB4
5	/WR	16	DB5
6	/RD	17	DB6
7	/CE	18	DB7
8	C/D	19	FS
9	NC	20	VEE
10	/RST	21	BLA
11	DB0	22	BLK